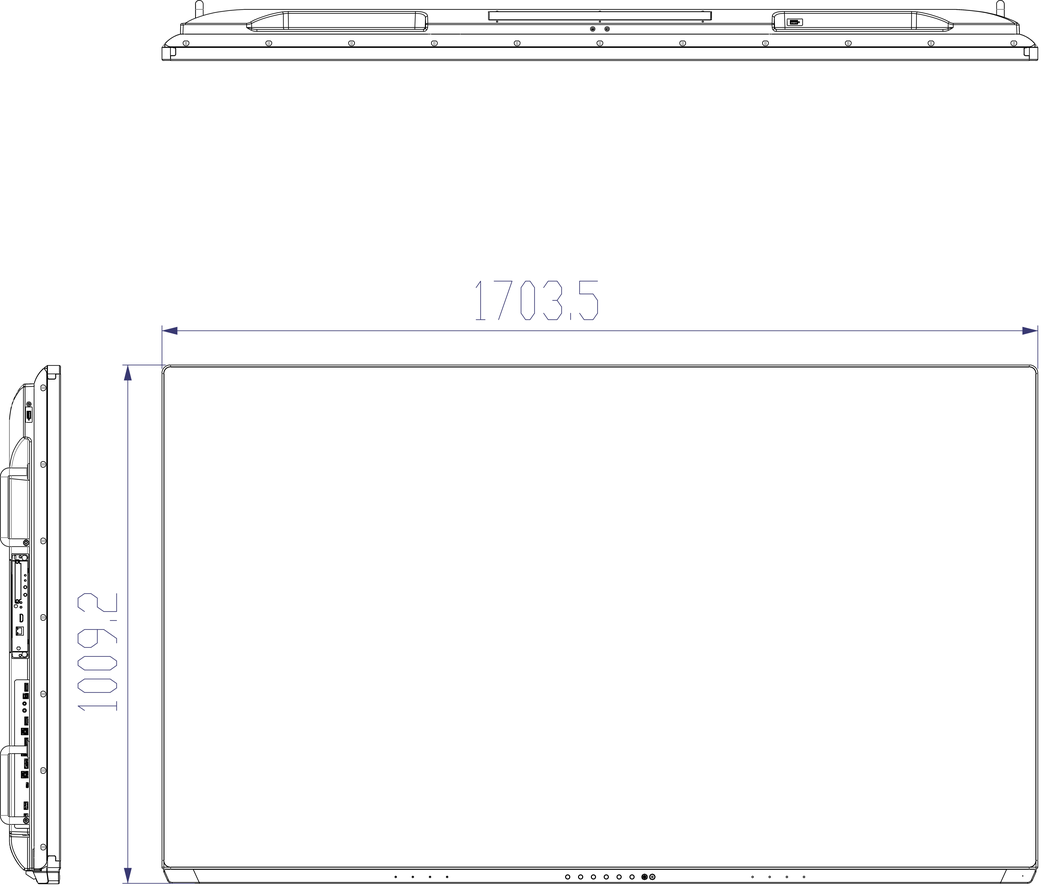
1703.5
1009.2

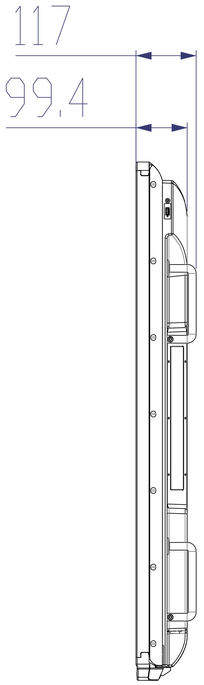
117
99.4

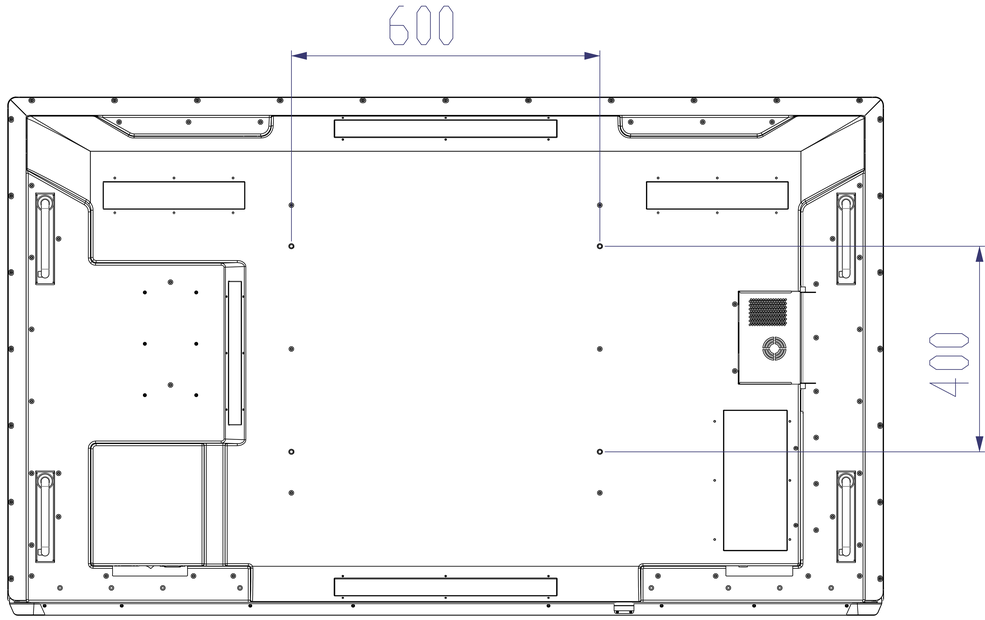
600
400